MESA Engineering Program—SJSU

# Civil Engineering (120 units)

Fall 2017 Catalog

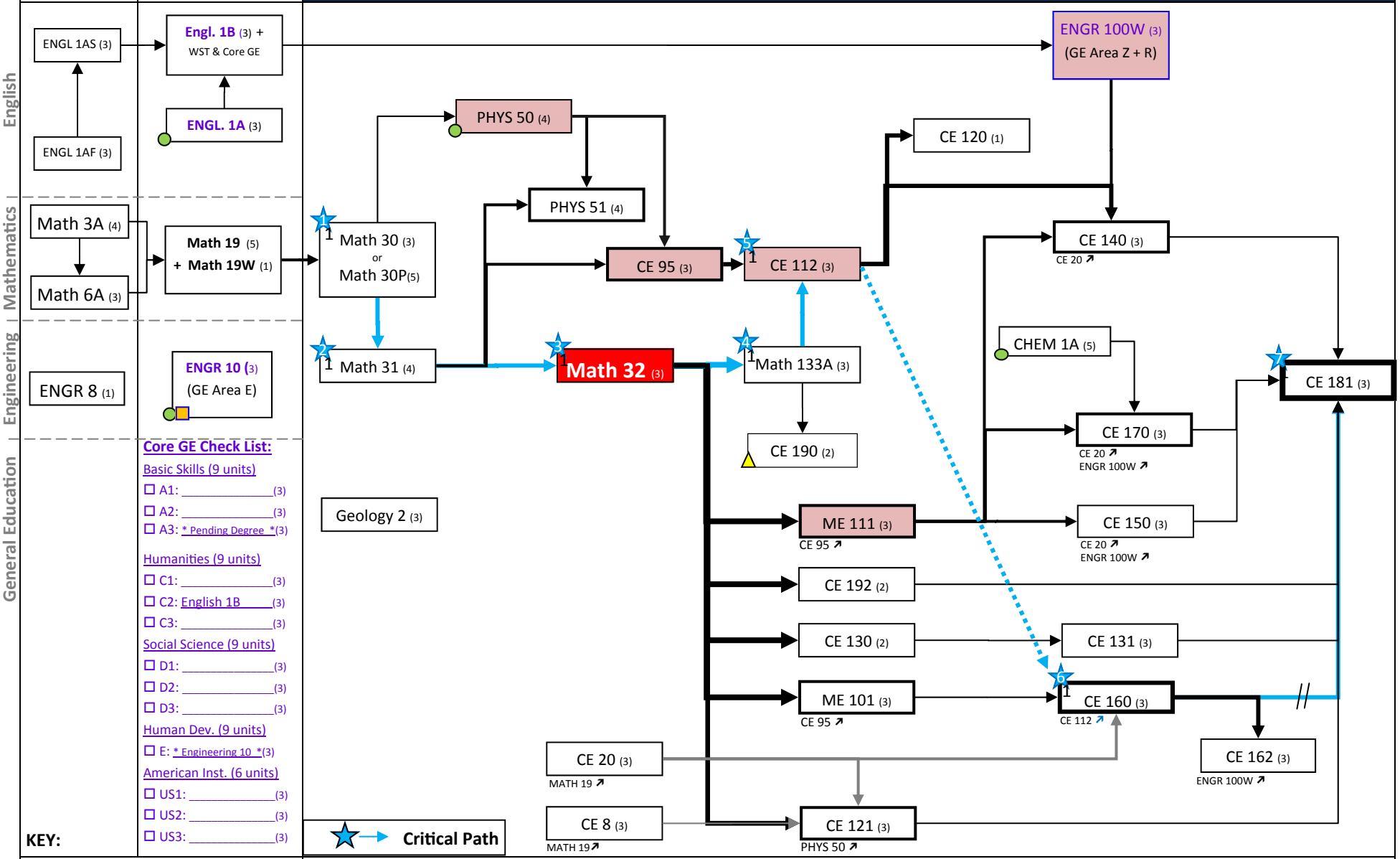


**Additional Requirements:**

Elective Courses: ☐ _____(3 units) ☐ _____(3 units) ☐ _____(3 units)

SJSU Studies: ☑ R & Z: ENGR 100W (3 units) ☐ S: _____ (3 units) ☐ V: _____ (3 units)

**This chart is only a reference, always consult your CE advisor.**

Revised: Summer 2017 /Prepared by: MESA Engineering Program -SJSU (2015)